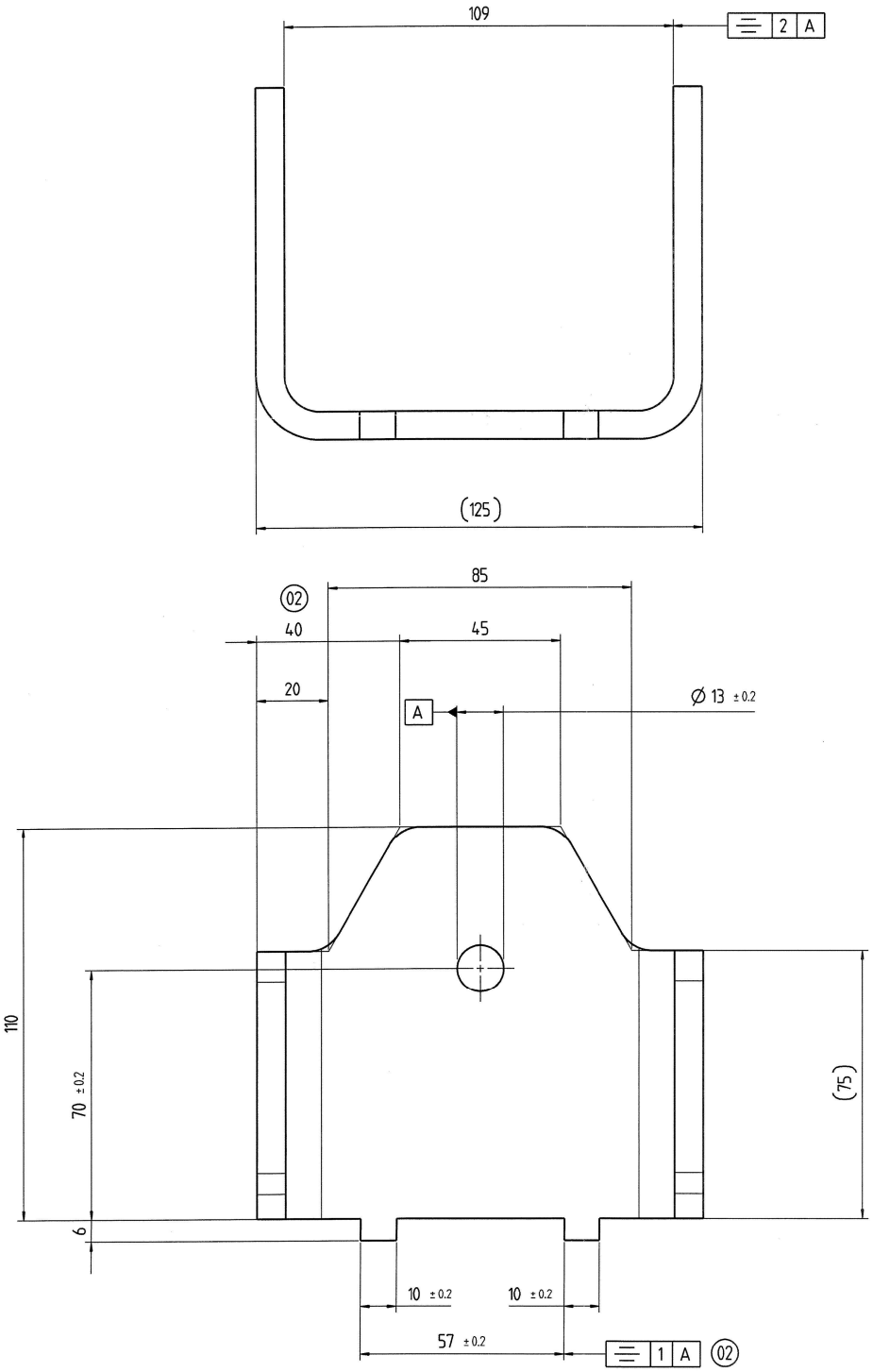

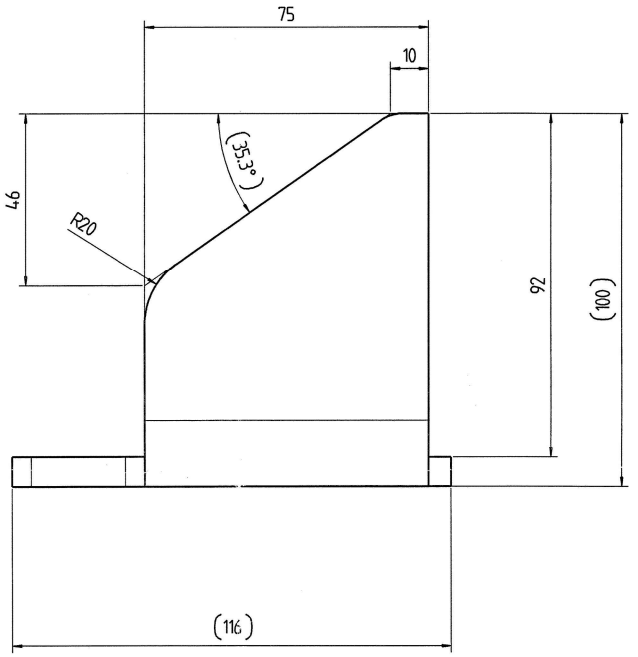

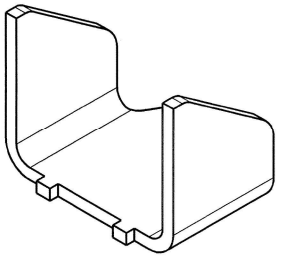

PŘEKLAD
dne: 17. 12. 2014
PROVEDL/A

THOUSTKA MAT.
NEWOT. TRADIUSY
TRADIUS OHYBU
DÉLKA ROZVINU

NOTA :

- Metal sheet thickness : 8 mm
- Radii without dimension : R = 10
- Bend radii : R = 10
- Unfolded length (for info) = /

FL00132pr1

- 2 -03- 2015
ARCHIV 2

02

+1.2
+0.4

NZ 14/01402

Condition at time of delivery	
de-scaled (degree of purity SA 2 1/2 acc. ISO 8501-1)	X
without burrs acc. WN 11310	
Permissible top-end rounding during flame cutting (also positive bead acc. WN 10572)	
oil-free / free of grease	
oiled	
oiling permissible	X
Indicate the required condition at time of delivery with an X.	

02

LASER cutting tolerances				
NOTA : min cutting radius without dimensions R = 1 mm unless otherwise specified				
≤ 30	30< ≤ 120	120< ≤ 400	400< ≤ 1000	1000 <
± 0,5	± 0,8	± 1,0	± 1,5	± 2,0

+0.5
-0.5

First angle projection

General tolerance (GT) in mm
Size range

	> 30	> 120	> 400	> 1000
≤ 30	≤ 120	≤ 400	≤ 1000	

GT coarse

L	1	2	2	3	4
◁	1	2	4	6	

Lengths (L) and angle (⊥ ∠)= ± GT

Tolerance Symbols ISO 1101

- ○ roundness =1/2ø-Tol.
- ⏥ straightness/flatness = GT
- ◎ concentricity/run out = GT
- ⌯ symmetry = GT
- / / parallelism = GT
- ⊕ position = GT

Languages:
en,fr

Index	alteration	Change no	Fit	Toler.
02	Oiled --> Oiled permissible	T48720		
	Adding breaking edge			
	Removing symetrical and adding dim. 40 and 20			
	Symetrical ±0.5 --> ±1			

Inspection dim.
Auxiliary dim. ( )

	Date	Name
Drawn	9.1.2014	J.Fonteny
Checked	13.1.2014	F.Proust
Auth'd	22.1.2014	R.Pelletier
M.check.	20.1.2014	J.LeCesne

Confidential document
Refer to protection notice ISO 16016

Material: S235JR following EN10025-2
Blank no:
Title: support
Weight: in kg 1.3
PROD.
Scale 1:1
Drawing number / / 11914010907
Sheet: 1 of: 1
Repl.
Orig.

Released

11914010907d001 A2