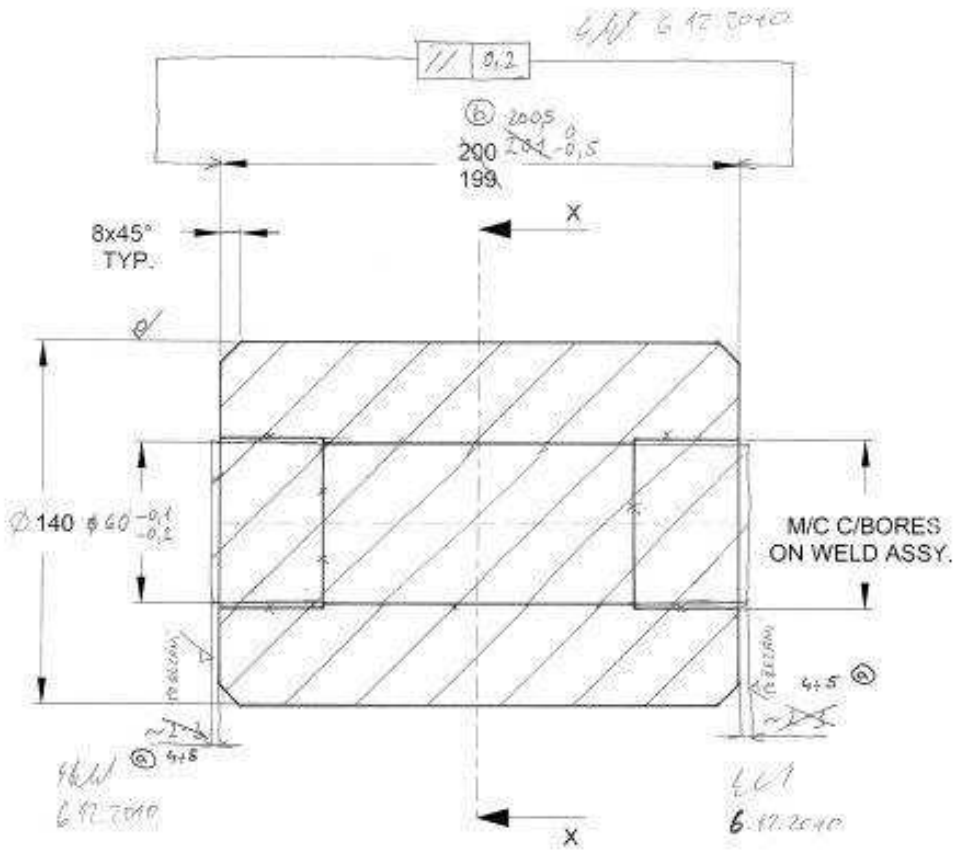

SECTION Y-Y

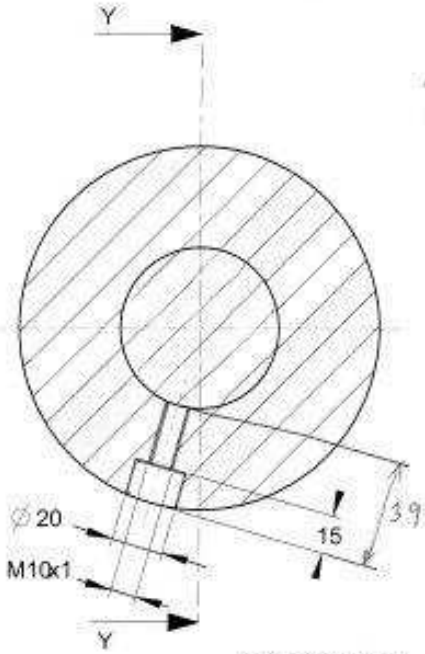

SECTION X-X

PICTORIAL VIEW
SCALE 1:5

12,5 (✓)

ARCHIV
22 [illegible]

KOO
20. dubna 2010

6112597M1			2
A	PROTOTYPE RELEASE		
B	MATERIAL DIAGRAM		
C	[illegible]		
1	PRODUCTION RELEASE		
2	[illegible]		
a	[illegible]	[illegible]	[illegible]
b	[illegible]	[illegible]	[illegible]

6111561M1	A. HOWELL	04/07/2007	
	[redacted]		

SCALE 1:2	SHEET 1 OF 1	MATERIAL STEEL BS 970 070M20	NAME BOOM BEARING BOSS
EST. WEIGHT 17.2 kg	DWG SIZE A3		PART NO. 6112597M1 / SHEET 2

- 8. pros. 2010 171/7