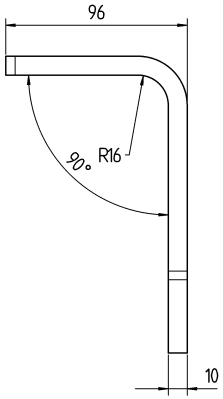

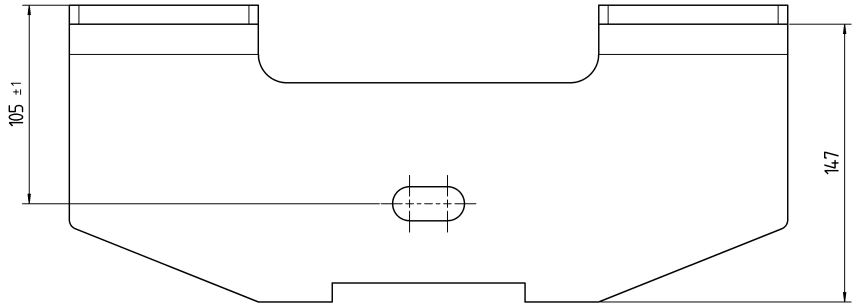

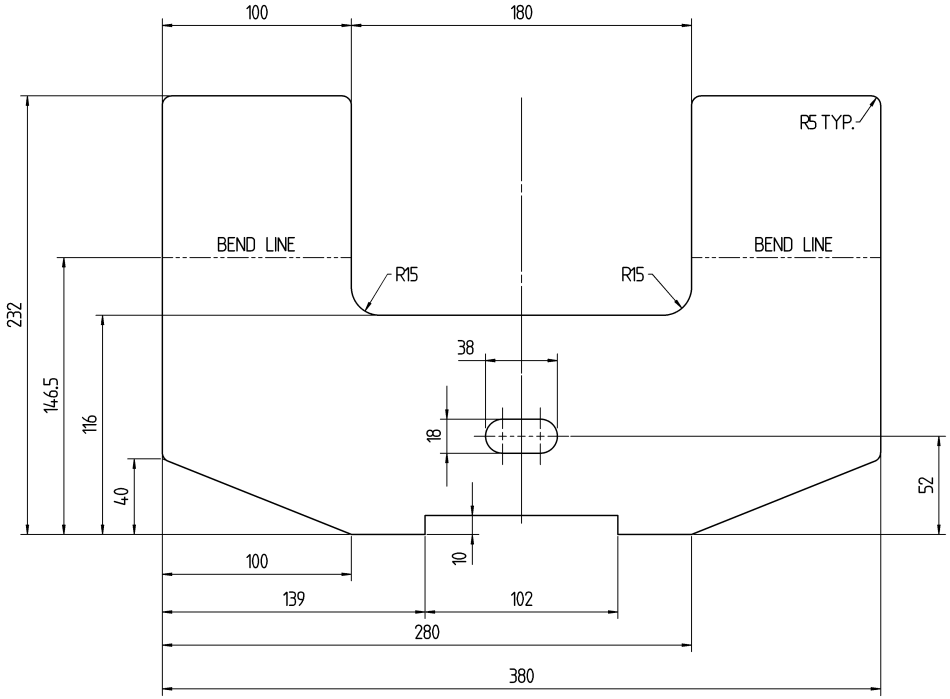

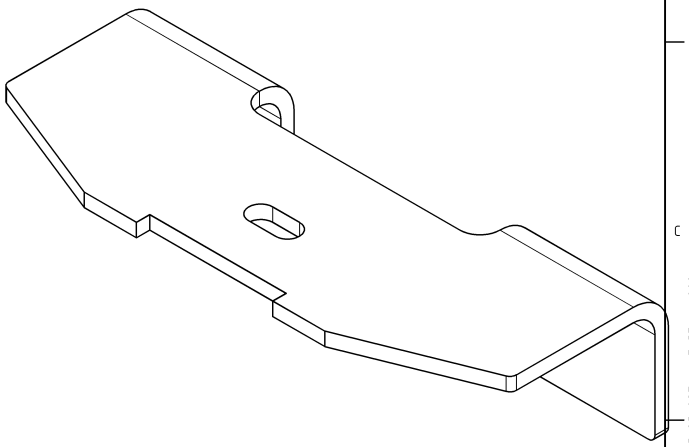

First angle projection				01	State was RFQ.		T23158		
General tolerance (GT) in mm									
Size range				Index	alteration		Change no	Fit	Toler.
> 30 ≤ 30	> 120 ≤ 120	> 400 ≤ 400	> 1000 ≤ 1000	Inspection dim.			Material: BS EN 10025 S275JR		Weight: in Kg 4.3
				Auxillary dim.	( )		Blank no:		
GT coarse					Date	Name			
L 1	2	2	3	4	Drawn 7.9.2009	L.Evans	Title: support Aftertreatment box		PROD.
∢ 1	2	4	6		Checked 17.3.2010	T.Scotford			
Lengths (L) and angle (⊥ ∠) = ± GT					Auth'd 23.3.2010	H.Williams			
Tolerance Symbols ISO 1101					M.check. 6.4.2010	H.Matthews			Scale 1:2
○ roundness				=1/2ø-Tol.			Drawing number / / 14014311814		Sheet: 1 of: 1
– ▱ straightness/flatness				= GT					
◎ ↗ concentricity/run out				= GT					
⌯ symmetry				= GT					
// parallelism				= GT					
⊕ position				= GT					
Languages: en					Confidential document Refer to protection notice ISO 16016		Repl.	Orig.	

Released 6 14014311814d001 A2

14014311814_DRW_000_0101812_der tk:in0044 GB51A1 2013-05-08T14:17:57 1:000