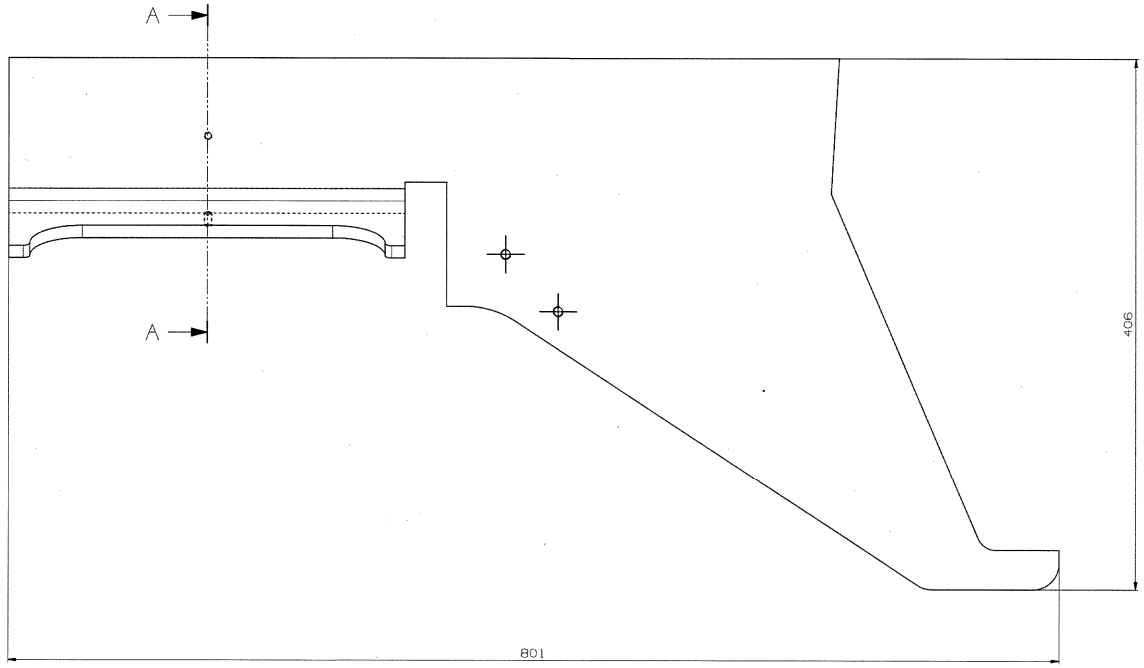

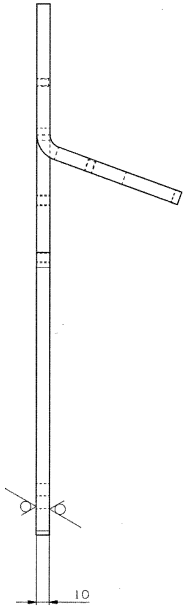

SECTION A-A

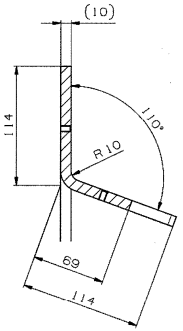

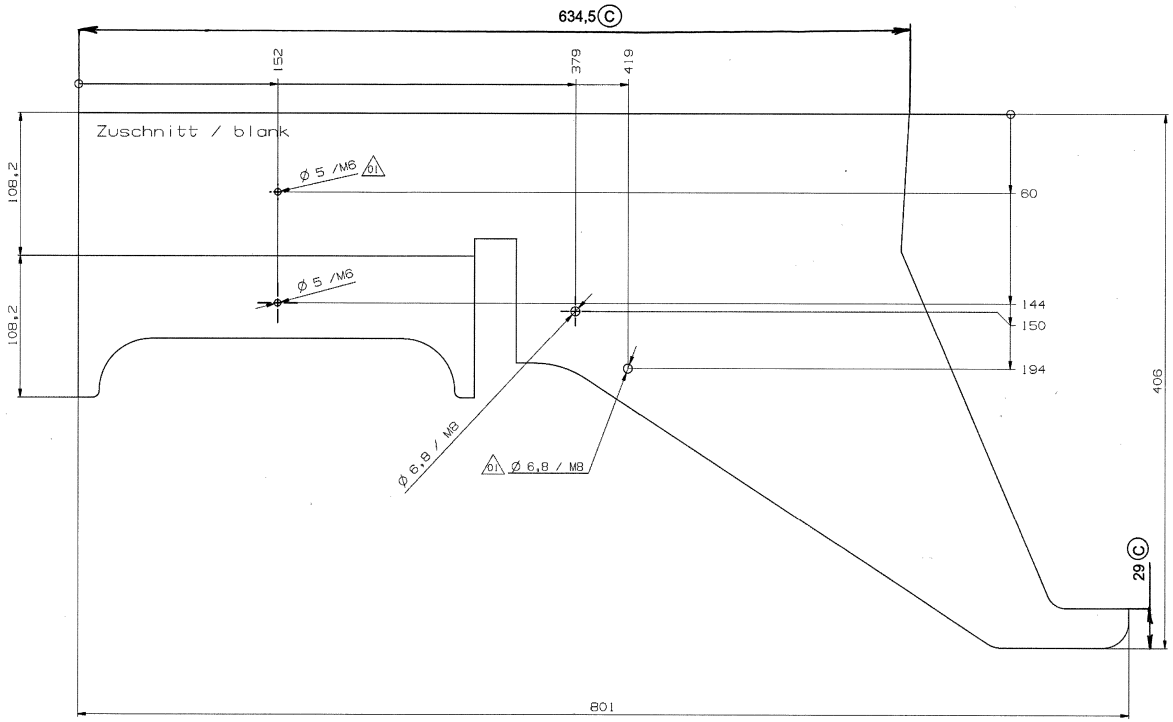

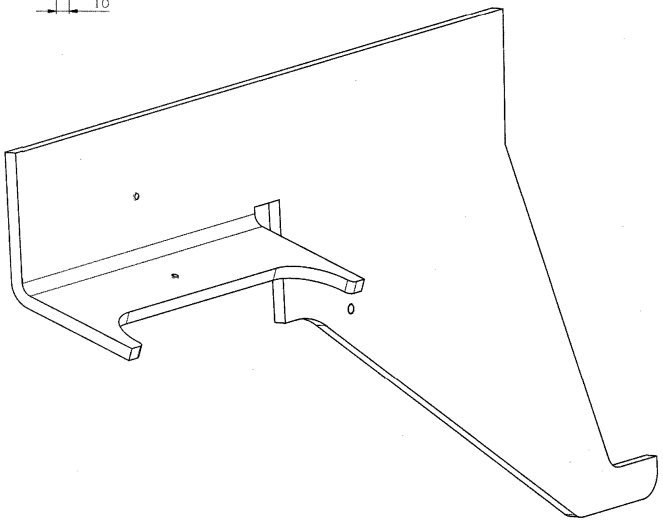

C -ZM/20/00255-ÚPRAVA DÍLU NA ZÁKLADĚ POŽADAVKU VÝROBY.

24.6.2020 **HRUBÝ**

29 -07- 2020
ARCHIV

3

Zur vollständigen Spezifikation ist der CAD Datensatz zu verwenden
Die Material-, Dokumentennummer und Version sind dem Schriftkopf zu entnehmen
For fully specification use the CAD dataset.
The material number / document number and version is defined in the header

Ra 12,5

-1
-0,5

					APPROVED FOR (F4) free for series		
					Welding Construction according to "Werknorm 43" Surface Quality according to "Werknorm 49" Theor. Weight according to "KA001-2003" Material according to "Werknorm 51"		-
							DCM-Nr.
Projection see: ISO 128			Name	Date	Material BS10	EX MB, DOMG NEU HINZU TX MB, DOMG ADDED	2
Scale	Originale-Size	Created	LNZHELDB	19Mar'2020			
1:2,5	A1				Surface Quality	Change	Count
		Approved	LNZSCHMG	19Mar'2020	Standard Color	Theor. Weight (kg) 12,1	
Bend Tolerance DIN 6935		Name	Laengstraeger				
Welding Tolerance DIN EN ISO 13920-BF							
General Tolerance DIN ISO 2768 - mK							
Surface Condition DIN EN ISO 1302							
Laser-Cut Tolerance DIN EN ISO 9013 K13		Additional Text					Sheet 1 OF 2
		Mat.-Nr.		Doc-Nr	2000424734	Version	01

The reproduction, distribution and use of this document as well as the communication of its contents to others without explicit authorisation is prohibited. Offenders will be held liable for the payment of damages. All rights reserved in the event of the grant of a patent, utility model or design.