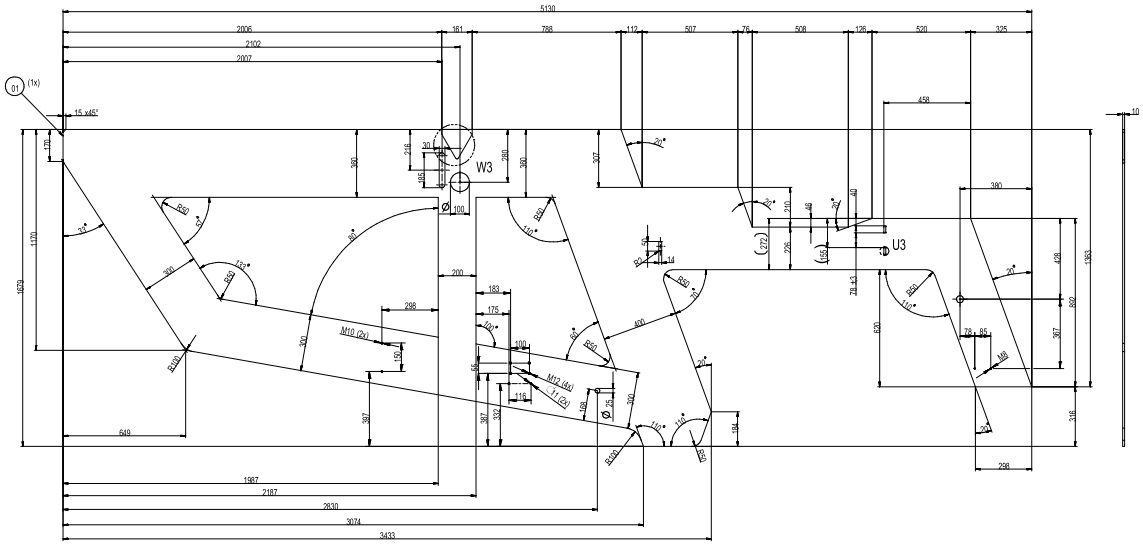

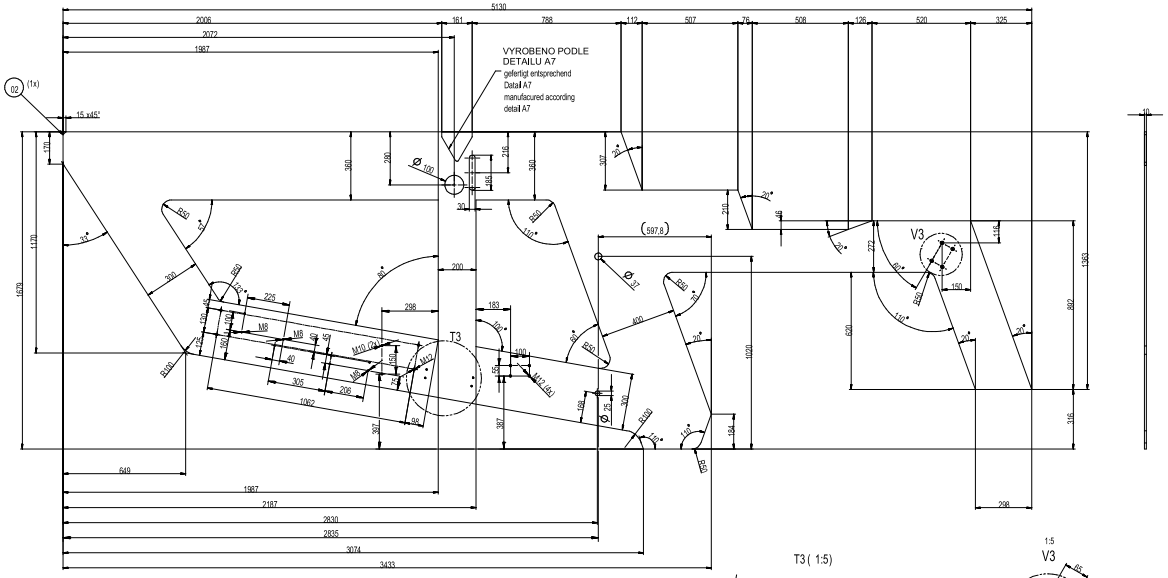

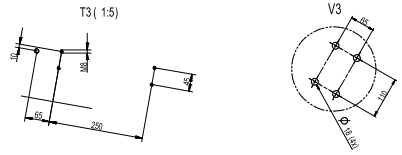

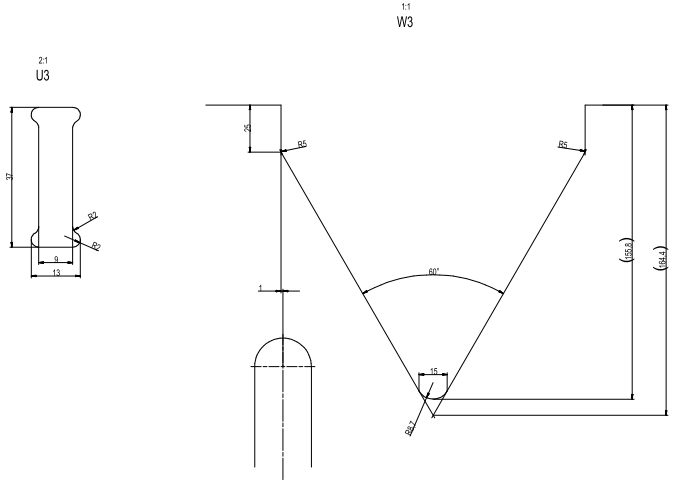

OHYBY DLE Č.V. 2327187/07

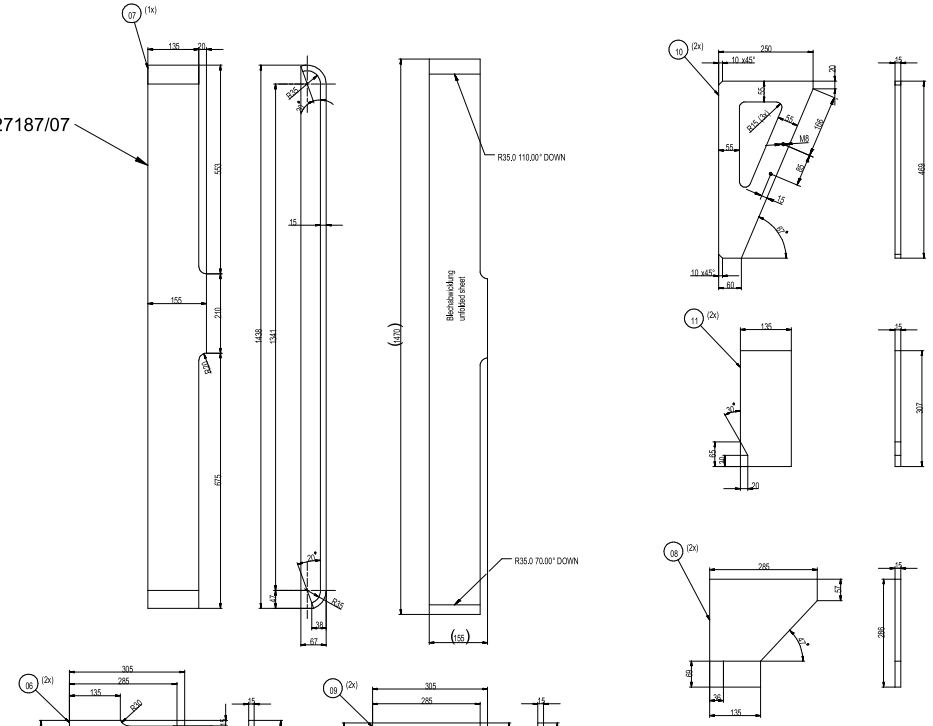

ZM/21/00403
DOPLNĚNÍ KOT K OSÁM OHYBU
11.11.2021
KAHÁNEK

REFER TO PROTECTION NOTICE ISO 16016	MATERIAL				TYPE	DOCUMENT-NO.	VERS.	STATUS
	EDMAS	8801S	MATAPPEL		UGD	4562517	15	PF
HSTG		DRAWING BY	APPROVED BY	LAST MODIFIED BY	TITLE			
ISO 8015	ISO 14405	DATE 14.05.2019	22.16.2019	14.05.2019				
ISO 2768	mK	NAME HUDOUPIN	GEYMYDT	GEYMYDT	FIRST USE		SCALE 1:10	FORMAT A0
ISO 13920	BF	DESCRIPTION				6018		SHEET OF 1 / 4
ISO 8062	CT10	SWT Chassis Aufgabeseite MR110Z EVO2						
ISO 9013	231							
ISO 1101	EN ISO 5180	Chassis feeding unit						
KWN 2188113					PART NO.		REVIS.	
					2327187		15L	