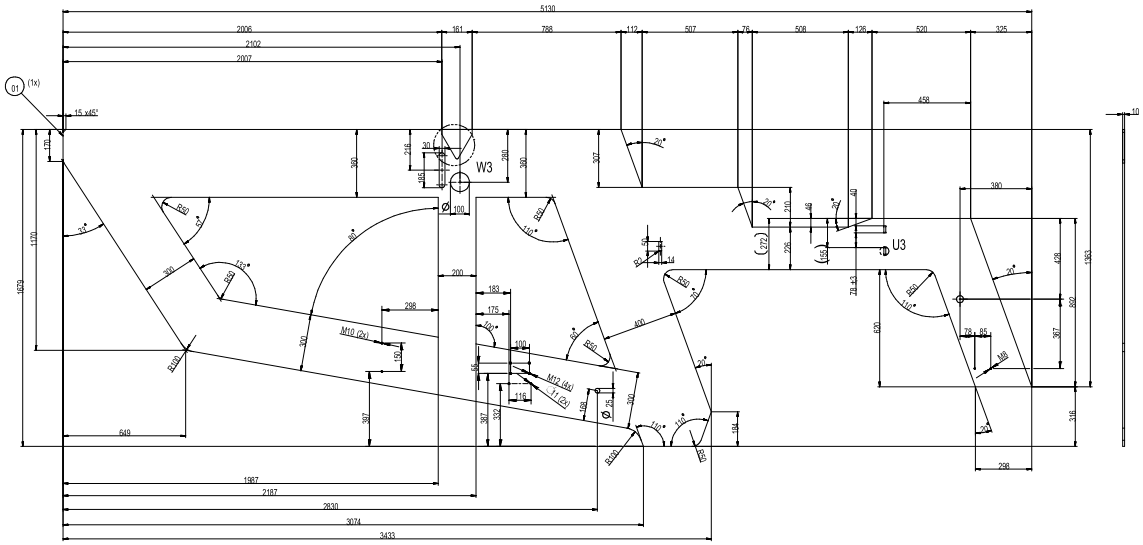

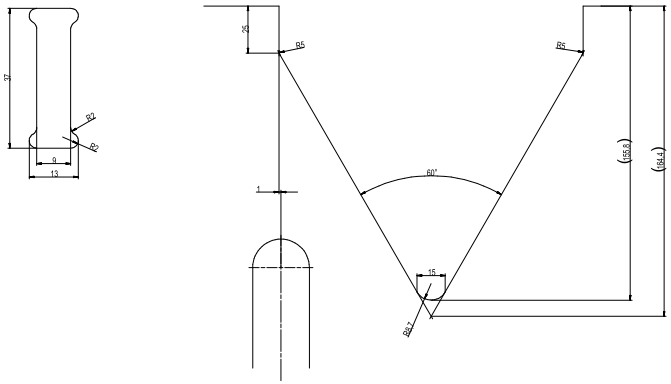

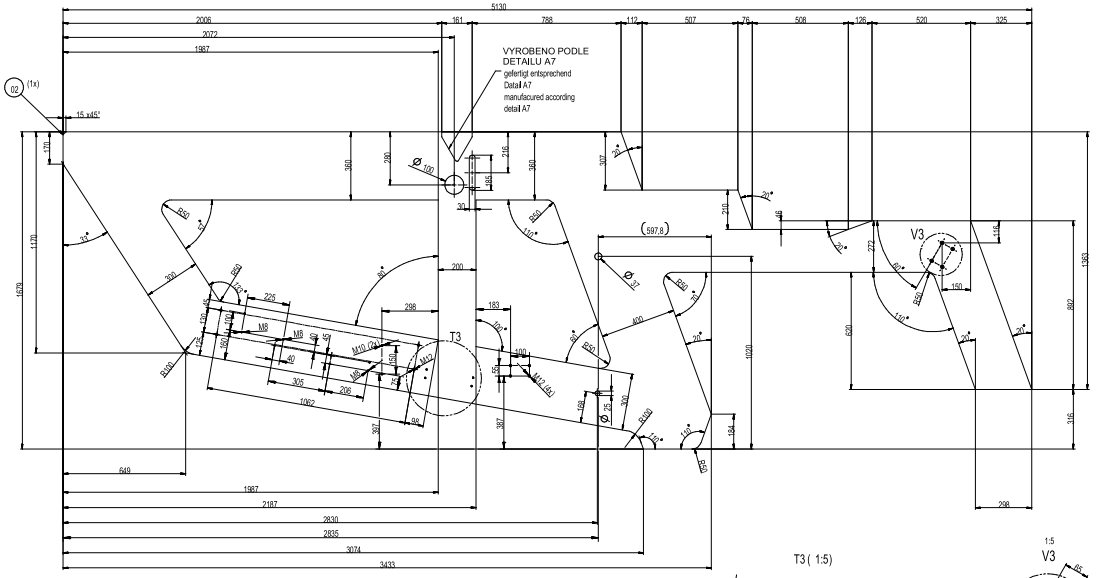

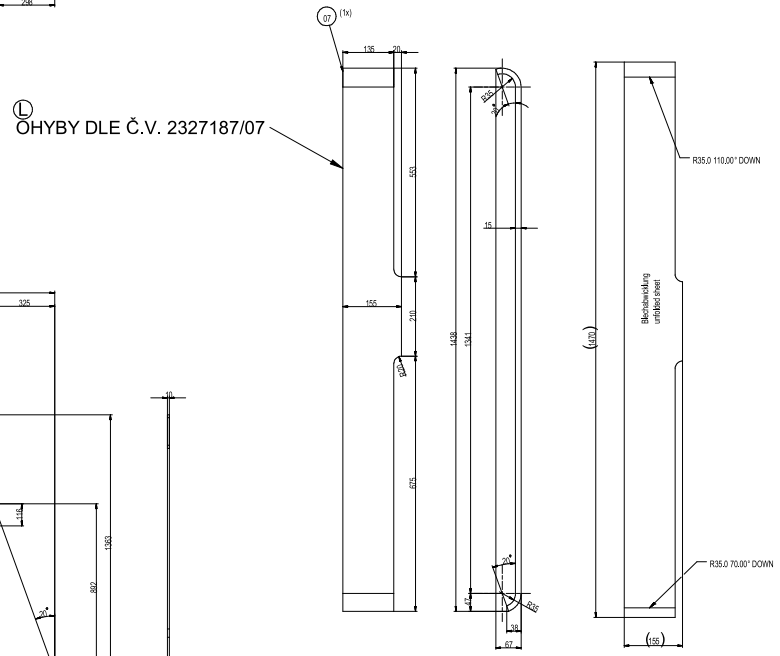

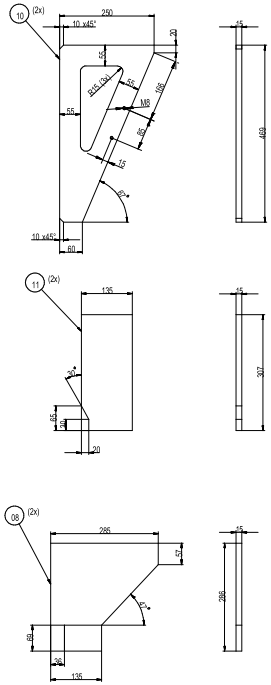

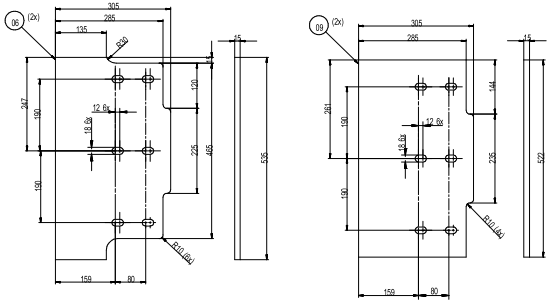

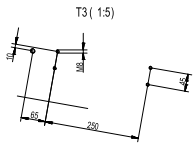

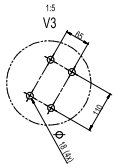

Ohne Beschichtung
KWN 2188815

ZM/21/00403
DOPLNĚNÍ KOT K OSÁM OHYBU
11.11.2021
KAHÁNEK

REFER TO PROTECTION NOTICE ISO 16016	MATERIAL				TYPE	DOCUMENT-NO.	VERS.	STATUS
	EDMS	8801S	MAT-NRSL		UGD	4562517	15	PF
HSTG		DRAWN BY	APPROVED BY	LAST MODIFIED BY	FORMAT	SCALE	FORMAT
ISO 8015	ISO 14405	DATE 14.05.2019	22.16.2019	14.05.2019	TP3 ISO	1:10	A0
ISO 2768	mK	NAME HUDOUPIN	GEYMYDT	GEYMYDT	FIRST USE 6018		SHEET OF 1 / 4
ISO 13920	BF	DESCRIPTION					
ISO 8062	CT10	SWT Chassis Aufgabeseite MR110Z EVO2					
ISO 9013	231	Chassis feeding unit					
ISO 1101	EN ISO 5180						
KWN 2188113					PART NO. 2327187		REVIS. 15L