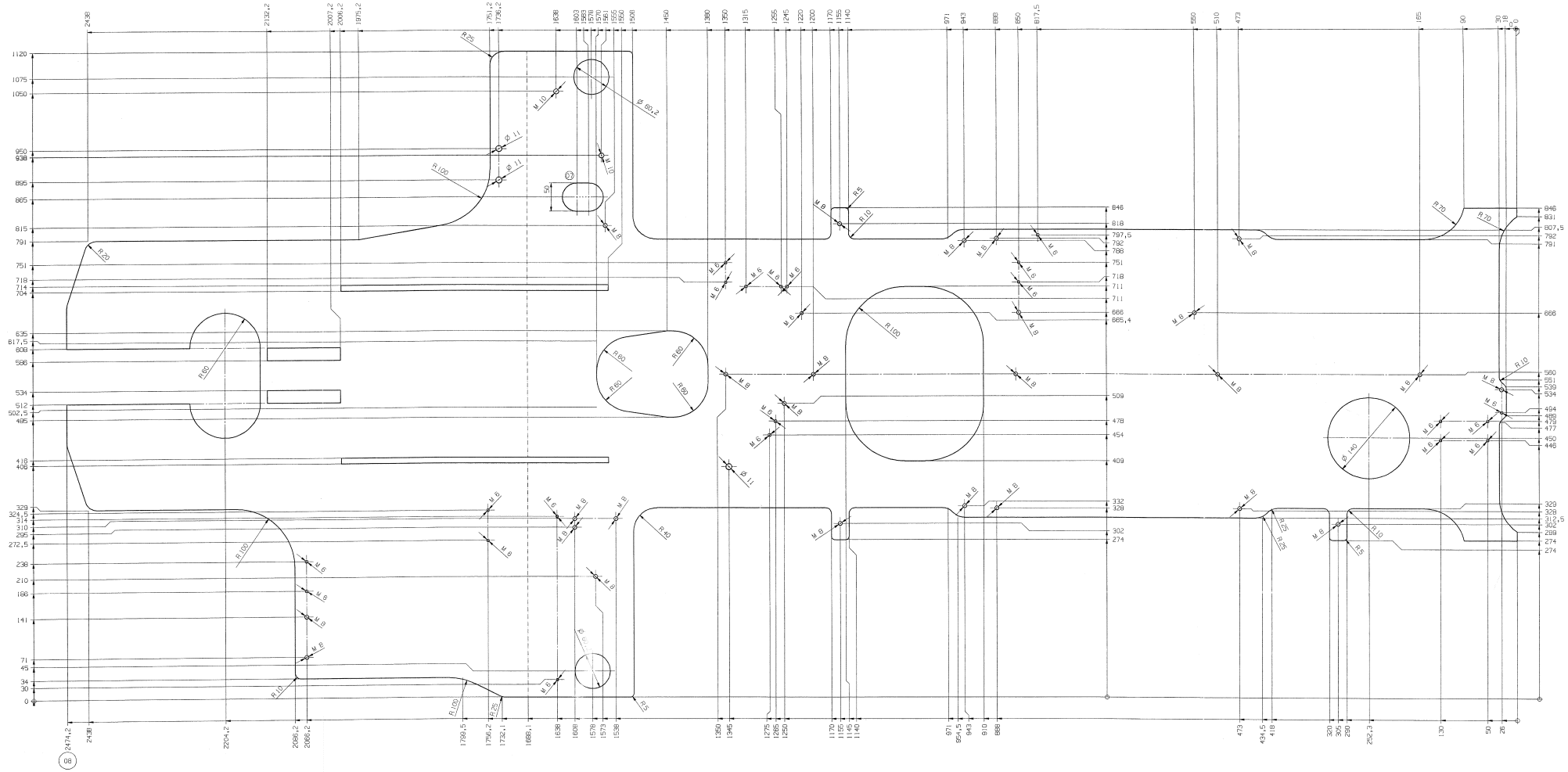

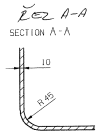

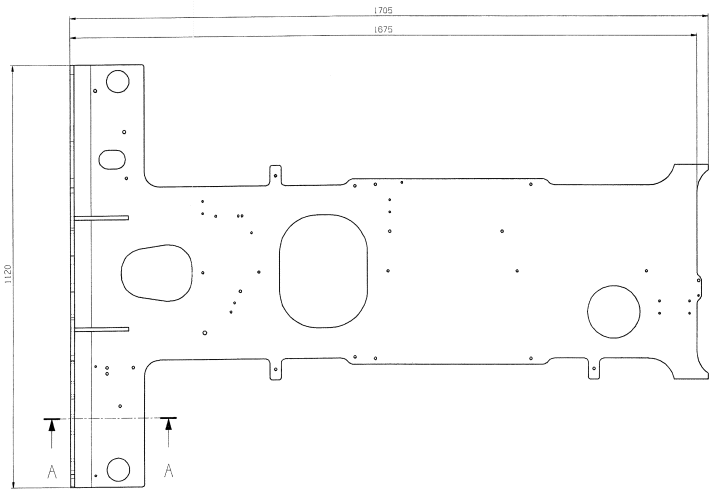

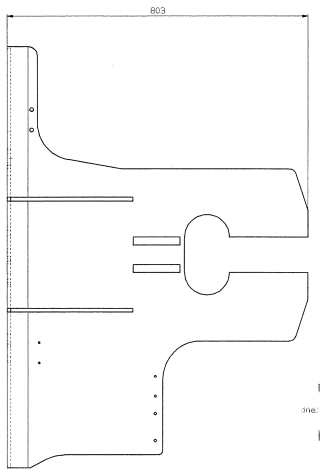

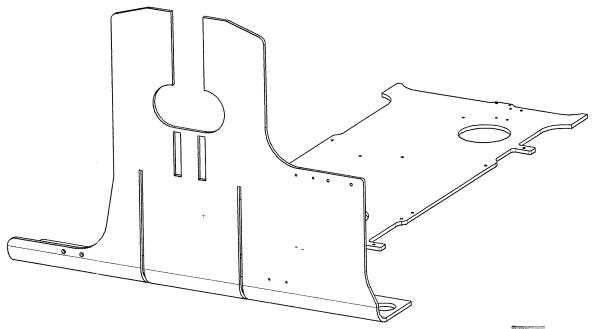

PŘEKLAD

one: - 8. 10. 2012

PROVEDLA

Hochman

29 -10- 2012

ARCHIV

7

NZ 12/00767

Screw threads tolerances ISO 965 - 2 Agilit								
General tolerances for expositylate cutting DIN EN ISO 9013 - 0 B								
General tolerances for laser cutting DIN 2310 - 5 -0, up to 3mm / -0K over 3mm								
General tolerances for bibbling / bending DIN 6930 - 2 - m								
Scale	Original-Size	Standard Color		13	MASS 3.7L2 WAR 3.4L2	KRAUJ.HEIDLAN	02.10.2012	K6943
1:5	A0	Name	Date	Chart / Design		Name	Date	Sign-Nr
Blind Tolerance see DIN 6930 - 2 - m		KRAUJ.HEIDLAN	01.10.2012	Material: B503		Tract Weight Kg		
Welding Tolerance see DIN EN ISO 13920-B								
General Tolerance see DIN ISO 2768 - m								
Surface Condition see DIN ISO 2192								
Laser Cut Tolerance see DIN 2310-5-0 up to 3mm / -0K over 3mm								
Copyright reserved to ISO 16016								

APPROVED FOR Serienfrei (F4)

Welding Construction according to "Werkmann 4.0"
Surface Quality according to "Werkmann 4.0"
Tract Weight according to "KRAUS-2007"
Material according to "Werkmann 5"

Name: Obergurt

Additional Text

Mail-Nr

Doc-Nr 2000060900 Version 08