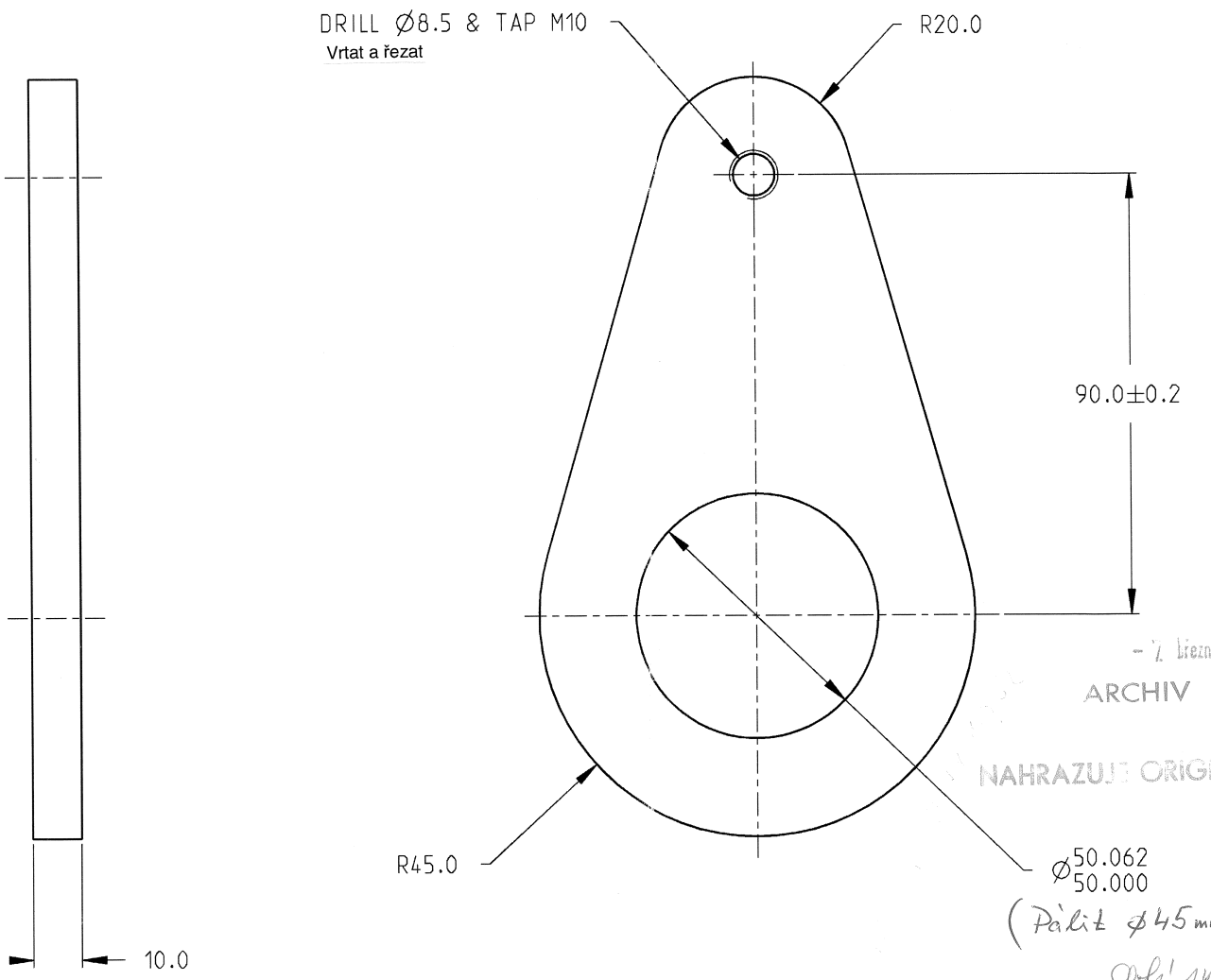

PART No.			ISSUE
6114712M1			1
ISSUE	CHANGE RECORD	EC No.	DATE
1	PRODUCTION RELEASE. DIM Ø50.062/50 WAS Ø51.5/51	CV-ECO-727	21/10/2009

- 7. března 2011
ARCHIV
NAHRAZUJE ORIGINAL

Slobl 14.12.10

21. pros. 2009

NOTES:

1. REMOVE ALL BURRS & SHARP EDGES.

Poznámky:
1.Odstranit ostřiny a všechny ostré hrany

PŘEKLAD
dne: 02-03-2011
02-03-2011
PROVEDL/A
300 kovární

TOLERANCES ON DIMENSIONS UNLESS OTHERWISE SPECIFIED						
NOMINAL SIZE OF DIMENSION	mm.	OVER	—	120	315	1000
		TO	120	315	1000	—
0 OR 1 DECIMAL PLACE			±0.6	±1.2	±2	±3
2 DECIMAL PLACES			±0.25 mm.			
ANGULAR TOLERANCE			±1°			
DIMENSIONS IN MILLIMETRES UNLESS OTHERWISE SPECIFIED			TEREX SPECIFICATION No. 45 APPLIES			

SCALE	SHEET	MATERIAL
1:1	1 OF 1	STEEL TO BS EN 10025 S355 JR
EST. WEIGHT	DRG SIZE	FINISH
0.6 kg	A3	TEST SPECIFICATION

SIMILAR PART	DRAWN	DATE
THIRD ANGLE PROJECTION	P.DICKENS	16-05-06
	APPROVED	DATE
	CONTROL	COVENTRY

NAME: TEARDROP PLATE
PLECH VÝZTUHY

PART No.	ISSUE
6114712M1	1

15. pros. 2010

171/11