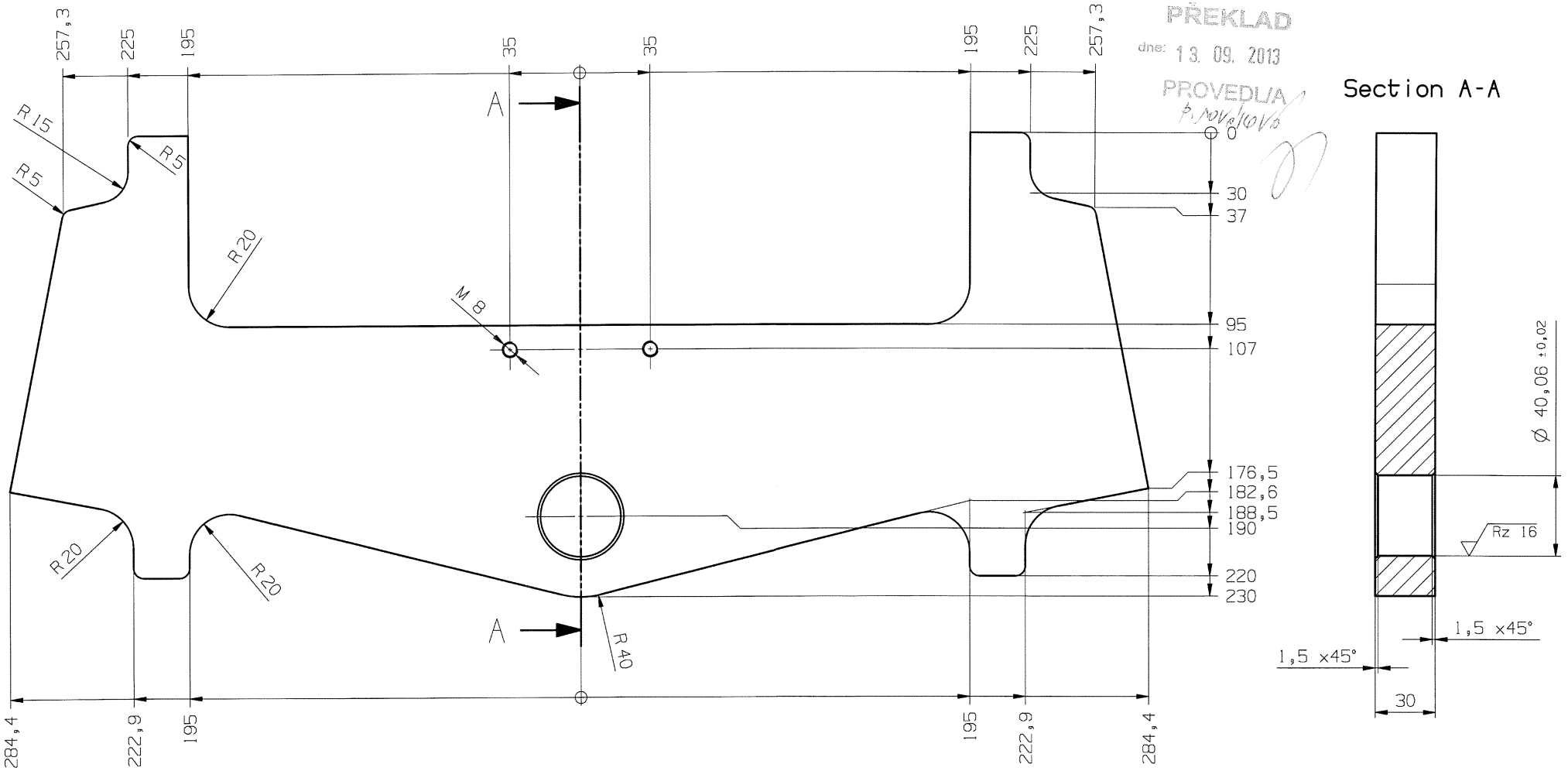

PŘEKLAD
dne: 13. 09. 2013
PROVEDL/A

-9-10-2013
ARCHIV
1

NZ 13/00760

APPROVED FOR **Prototypenfrei (F2)**

Welding Construction according to "Werknorm 43"
Surface Quality according to "Werknorm 40"
Theor. Weight according to "KR001-2003"
Material according to "Werknorm 51"

General tolerances for laser cutting
DIN 2310 - 5 -IL up to 3mm / -IK over 3mm

General tolerances for nibbling / bending
DIN 6930 - 2 - m

Projection see: ISO 128	
Scale	Originale-Size
1:2	A3

Bend Tolerance see DIN 6930 - 2 - m
Welding Tolerance see DIN EN ISO 13920-BF
General Tolerance see DIN ISO 2768 - mk
Surface Condition see DIN ISO 1302
Laser-Cut Tolerance see
DIN 2310-5-IL up to 3mm / -IK over 3mm

Copyright reserved to ISO 16016

Surface Quality
Standard Color

Name	Date
KRAU_SCHMIGE	25.04.2013

Count	Change	Name	Date	OCM-Nr.
	TEIL ÜBERARBEITET PART REWORKED	KRAU_SCHMIGE	21.05.2013	K16695

Material: **BS03** Theor. Weight (kg): **16.37**

Name **Traverse**

Additional Text

Mat-Nr. Doc-Nr **2000132257** Version **01**