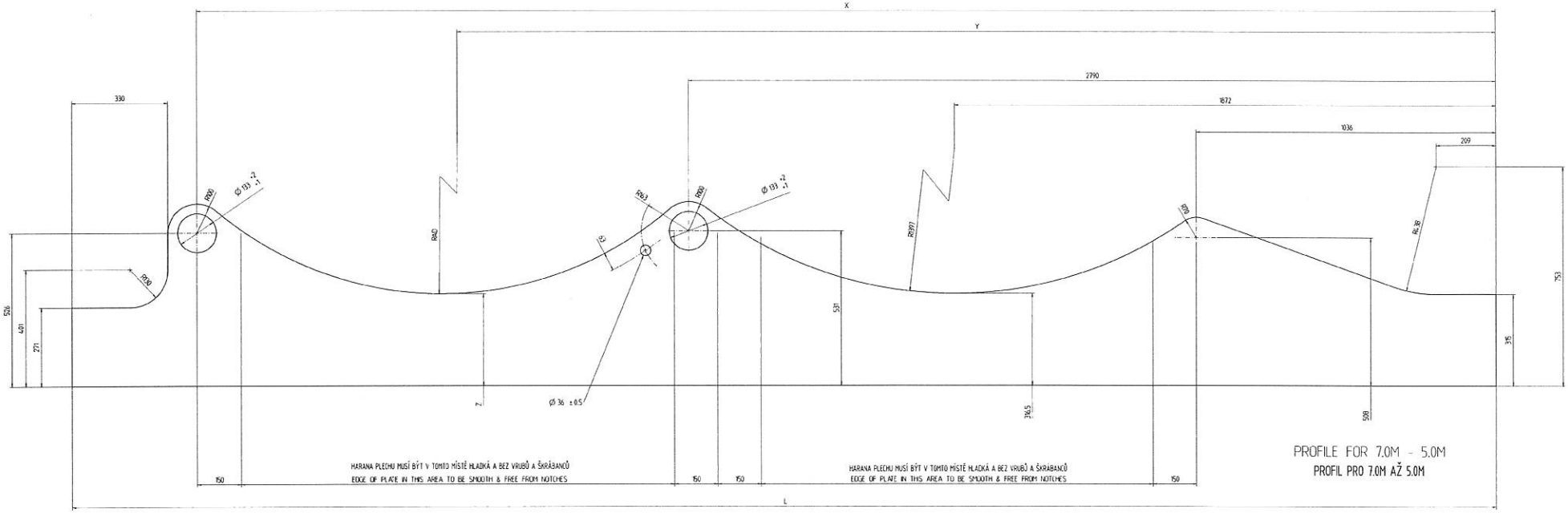

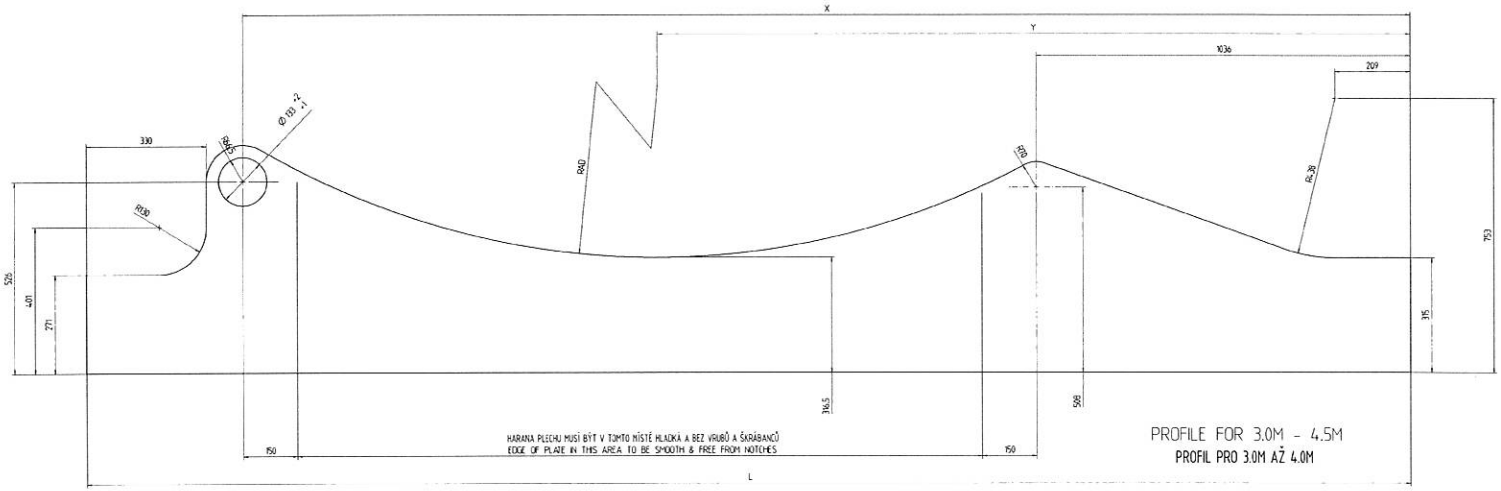

Zdvih	VNITŘNÍ SLOUP Č.SLO SESTAVY				L	HMOT	X	Y	Z
3.0m	179	446	04	00	2811	873	2481	1777	N/A
3.5m	179	446	04	01	3161	1317	2731	1846	N/A
4.0m	179	446	04	02	3411	1716	2981	1956	N/A
4.5m	179	446	04	03	3661	2171	3231	2088	N/A
5.0m	179	446	04	04	3911	264	3481	3127	412,5
6.5m	179	446	04	05	4161	417	3731	3282	316,5
5.0m	179	446	04	06	4411	624	3981	3287	316,5
6.5m	179	446	04	07	4661	895	4231	3513	316,5
7.0m	179	446	04	08	4911	1202	4481	3638	316,5
7.5m	**179**	**446**	**04**	**30**	**5211**	**1545**	**4781**	**3780**	**316,5**
7.5m	**179**	**446**	**04**	**73**	**5161**	**1781,5**	**4731**	**3754**	**316,5**
8.1m	179	446	04	79	5661	2245	5231	3924	412

THIS IS A SAFETY CRITICAL COMPONENT
TOTO JE NEZBYTNÝ BEZPEČNOSTNÍ KOMPONENT

VOP CZ s.r.o. Šumperk

Tolerances: General tolerances (GTs) in mm
Size range: ≤ 10 | > 10 ≤ 100 | > 100 ≤ 1000 | > 1000 ≤ 10000
Lin. coarse: 1 | 2 | 3 | 4 | 5
Angular: ±1 | ±1° | ±30' | ±20' | ±10'
Material: EN 10025 S355 J0
Weight: m kg 0.0
Title: DRWGCOLL profile OUTER MAST VNĚJŠÍ SLOUP
Drawing number: 1798086024
Scale: 1:5
Sheet: 1 of 1
Released