PŘEKLAD
dne: 22. 06. 2012
PROVEDLA
P. Novákova

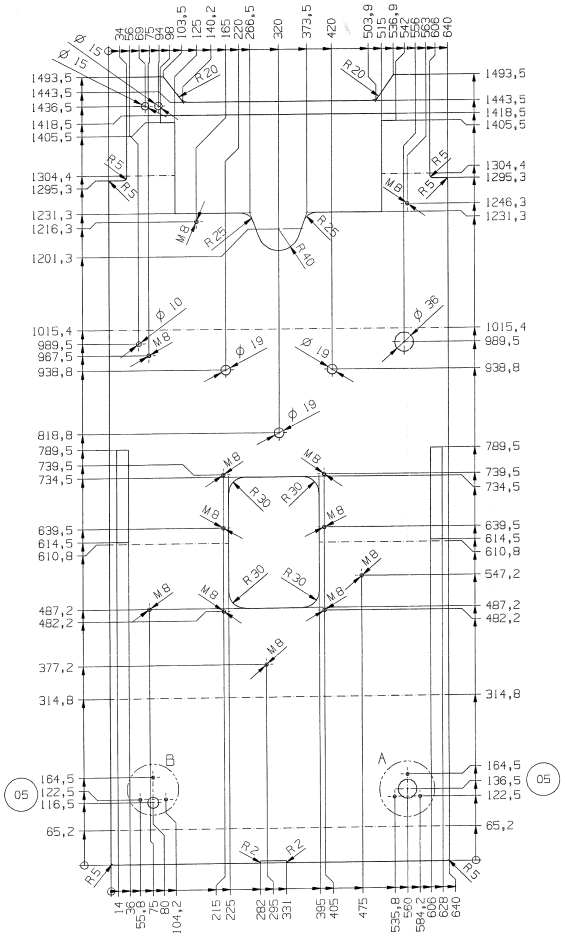

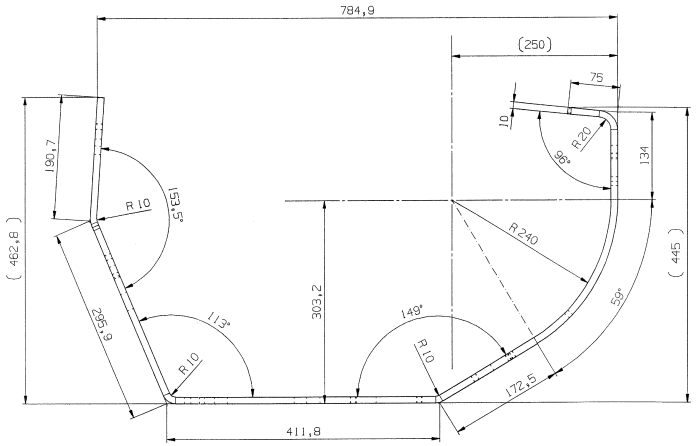

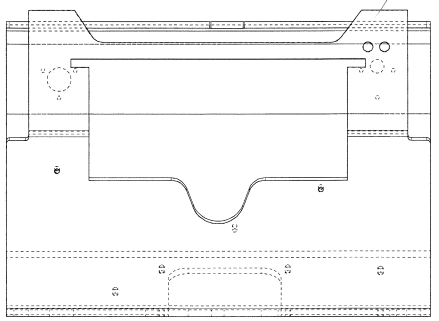

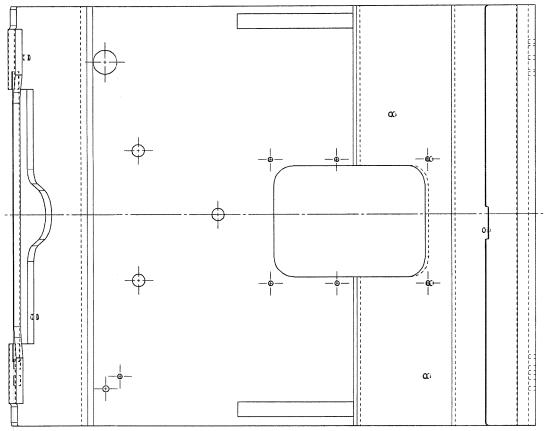

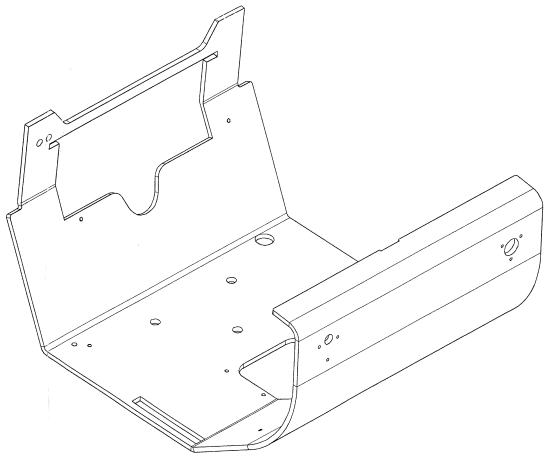

DETAIL B
SCALE 1:2

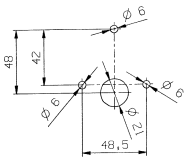

DETAIL A
SCALE 1:2

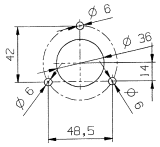

11-09-2012
ARCHIV
4

Screw threads tolerances ISO 965 - 2 6g/6H	
General tolerances for oxyacetylene cutting DIN EN ISO 9013 - J B	
General tolerances for laser cutting DIN 2310 - 5 -H. up to 3mm / -K over 3mm	
General tolerances for nibbling / bending DIN 6930 - 2 - m	

APPROVED FOR Serienfrei (F4)
Welding Construction according to "Werknorm 43"
Surface Quality according to "Werknorm 40"
Theor. Weight according to "KR001-2003"
Material according to "Werknorm 51"

Scale	Originale-Size	Standard Color						
1:4	A1	Name	Date	BOHRUNGEN FÜR STECKDOSE HINZU		KRAU_HIERLAN	06.06.2012	K15712-1
Bend Tolerance see DIN 6930 - 2 - m		KRAU_SCHMIDT	11.11.2005	Count	Change	Name	Date	DCM-Nr.
Welding Tolerance see DIN EN ISO 13920-BF				Material: BS10		Theor. Weight (kg): 62.64		
General Tolerance see DIN ISO 2768 - m		Name Motorwanne						
Surface Condition see DIN ISO 1302								
Laser-Cut Tolerance see DIN 2310-5-H. up to 3mm / -K over 3mm		Additional Text						
Copyright reserved to ISO 16016		Mat-Nr. 1000130785		Doc-Nr 2080100535		Version 05		