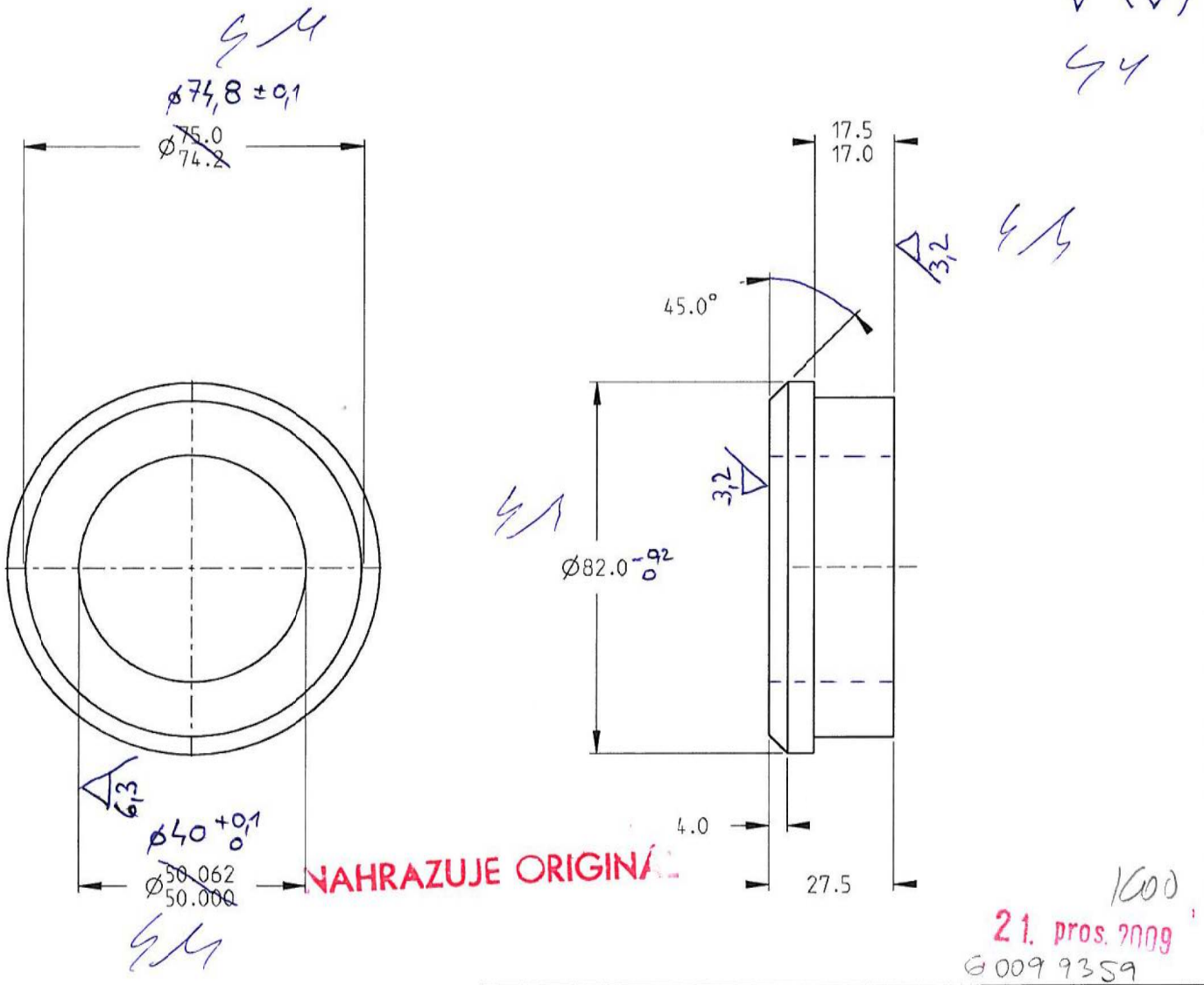

NAHRAZUJE ORIGINÁL

1600

21. pros. 2009

6 009 9359

PART No.			ISSUE
6112739M1			1
ISSUE	CHANGE RECORD	ECI No.	DATE
A	PROTOTYPE RELEASE		15/08/2007
B	MATL WAS EN1013 SH		
1	PRODUCTION RELEASE. SURFACE FINISH SYMBOLS REMOVED.	CV-ECO-727	19/10/2009

© 1.00 Version drawing. ALL RIGHTS RESERVED. THIS DRAWING IS THE CONFIDENTIAL PROPERTY OF THE ABOVE NAMED COMPANY WITHOUT WHOSE PRIOR WRITTEN CONSENT IT MUST NOT BE COPIED USED OR COMMUNICATED TO OTHERS WHOLLY OR IN PART.

SIMILAR PART	DRAWN	DATE
	A. HOWELL	15/08/2007
THIRD ANGLE PROJECTION	APPROVED	DATE
	CONTROL COVENTRY	

TOLERANCES ON DIMENSIONS UNLESS OTHERWISE SPECIFIED						
NOMINAL SIZE OF DIMENSION	mm.	OVER	—	120	315	1000
		TO	120	315	1000	—
0 OR 1 DECIMAL PLACE			±0.5	±1.2	±2	±3
2 DECIMAL PLACES			±0.25 mm.			
ANGULAR TOLERANCE			±1°			
DIMENSIONS IN MILLIMETRES UNLESS OTHERWISE SPECIFIED			TRIBOL SPECIFICATION No. AS APPLIES			

SCALE	SHEET	MATERIAL	NAME
1:1	1 OF 1	STEEL BS 970 070M20	BUCKET CYL. BOSS
EST. WEIGHT	DWG SIZE	FINISH	NÁBOJ
0.3 kg	A3	TEST SPECIFICATION	PART No. 6112739M1 ISSUE 1

171/9

-8. pros 2010