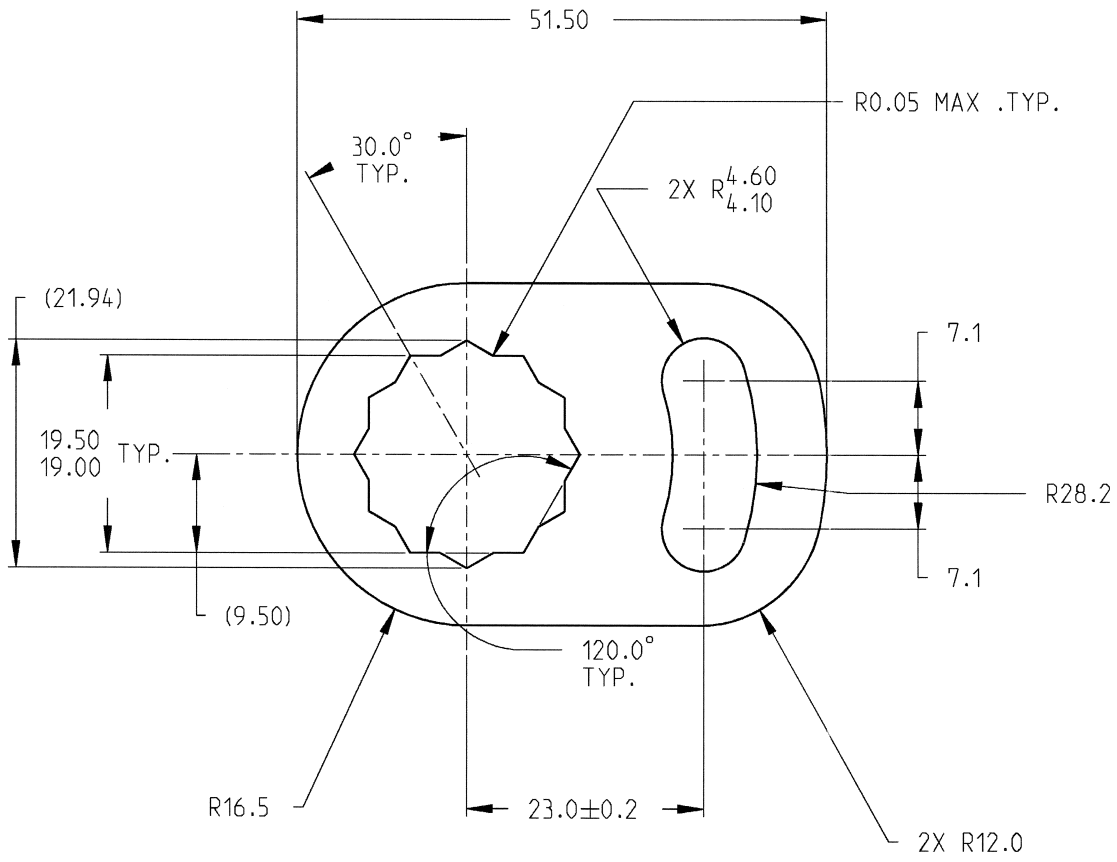

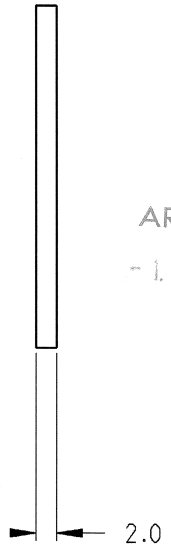

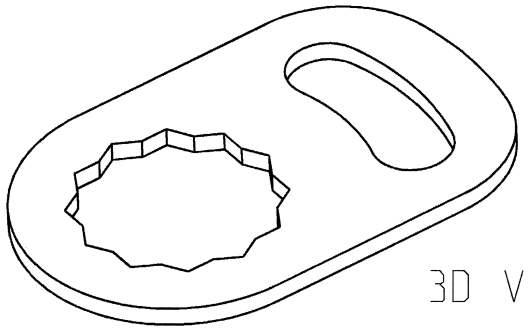

3D VIEW

PŘEKLAD
dne: 28-02-2011
PROVEDL/A
BOČKOVÁ

ARCHIV
- 1. března 2011

NAHRAZUJE ORIGINÁL

Poznámka:
Díl musí být čistý bez ostřin a opalů

NOTE:
PART MUST BE CLEAN & FREE FROM BURRS

21. pros. 2009

PART No.			ISSUE
6114516M1			3
ISSUE	CHANGE RECORD	EC No.	DATE
A	PROTOTYPE RELEASE		06-Mar-08
B	DIM 19 - 19.5 WAS 18.2 - 18.7		04-Apr-08
1	PRODUCTION RELEASE	CV-ECO-334	03-Oct-08
2	2x ANGLE 10° REMOVED. DIM 51.5		03-Sep-09
	WAS 44.5. DIM 2x R4.6/4.1 WAS		
	2x R3.1/2.6. DIM 7.1 WAS 6 (x2).		
	DIM R28.2 WAS R22.6. DIM 23±0.2		
	WAS 19.1±0.2.		
3	PRODUCTION RE-RELEASE	CV-ECO-727	21-Oct-09

TOLERANCES ON DIMENSIONS UNLESS OTHERWISE SPECIFIED						
NOMINAL SIZE OF DIMENSION	mm.	OVER	—	120	315	1000
		TO	120	315	1000	—
0 OR 1 DECIMAL PLACE			±0.6	±1.2	±2	±3
2 DECIMAL PLACES			±0.25 mm.			
ANGULAR TOLERANCE			±1°			
DIMENSIONS IN MILLIMETRES UNLESS OTHERWISE SPECIFIED			TEREX SPECIFICATION No. 45 APPLIES			

SCALE	SHEET	MATERIAL
2:1	1 OF 1	STEEL TO BS EN10 025 S275 OR EQUIVALENT
EST. WEIGHT	DRG SIZE	FINISH
0.016 kg	A3	ZINC PLATE TO CMS M 1047
		TEST SPECIFICATION

SIMILAR PART	DRAWN	DATE
	P.DICKENS	06/03/08
THIRD ANGLE PROJECTION	APPROVED	DATE
	CONTROL	COVENTRY

NAME
LOCK PLATE
POJISTKA

PART No.	ISSUE
6114516M1	3

-8. pros 2010

LNF 1,2 MEM
171/8