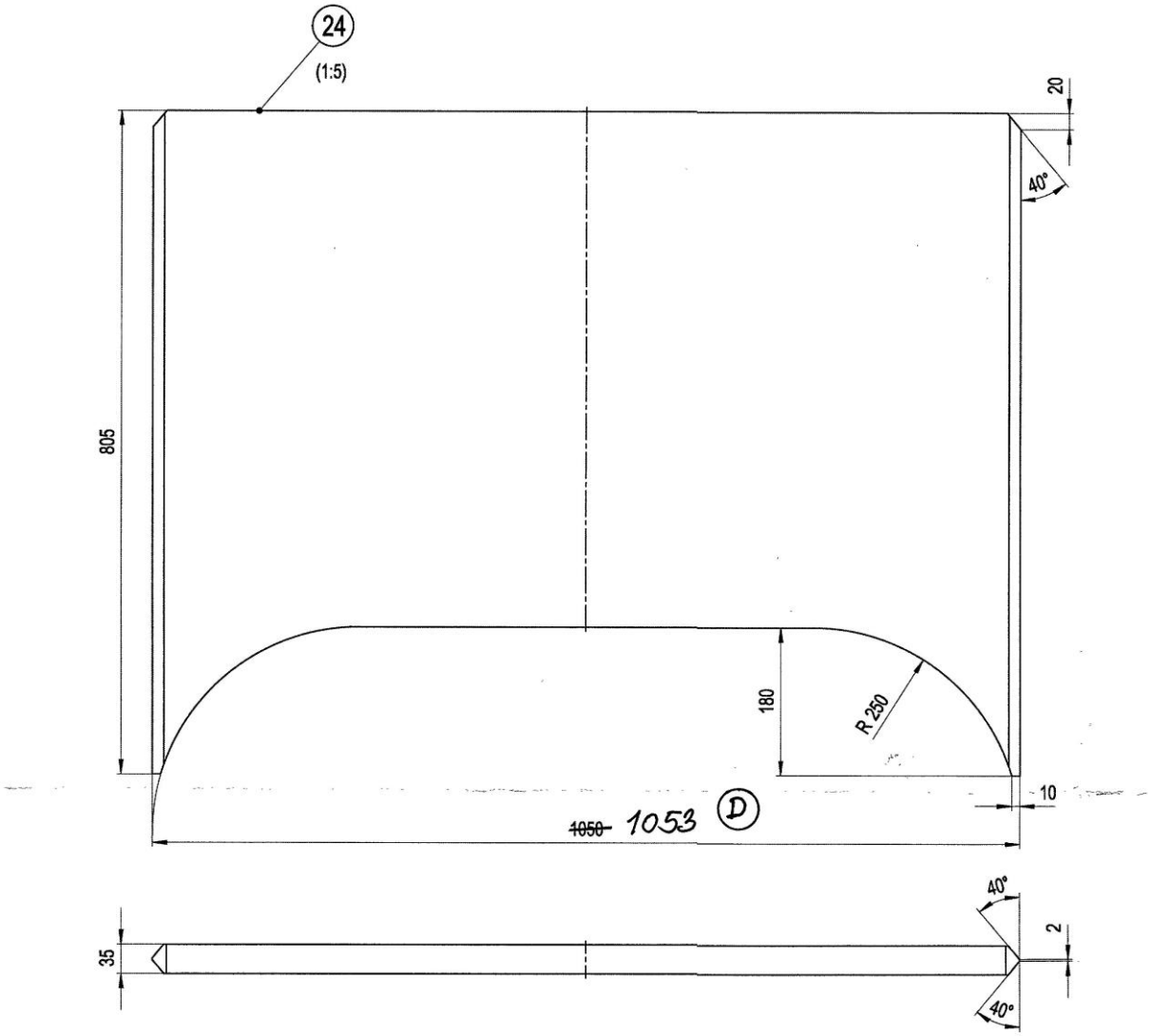
24
(1:5)
20
40°
805
180
R 250
10
~~1050~~ 1053
D
40°
2
35
40°