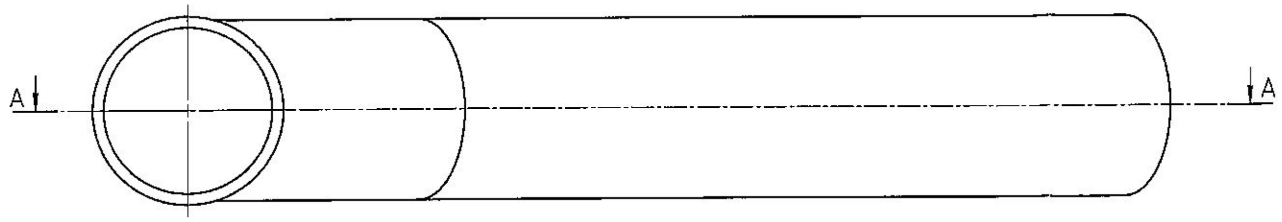

A-A

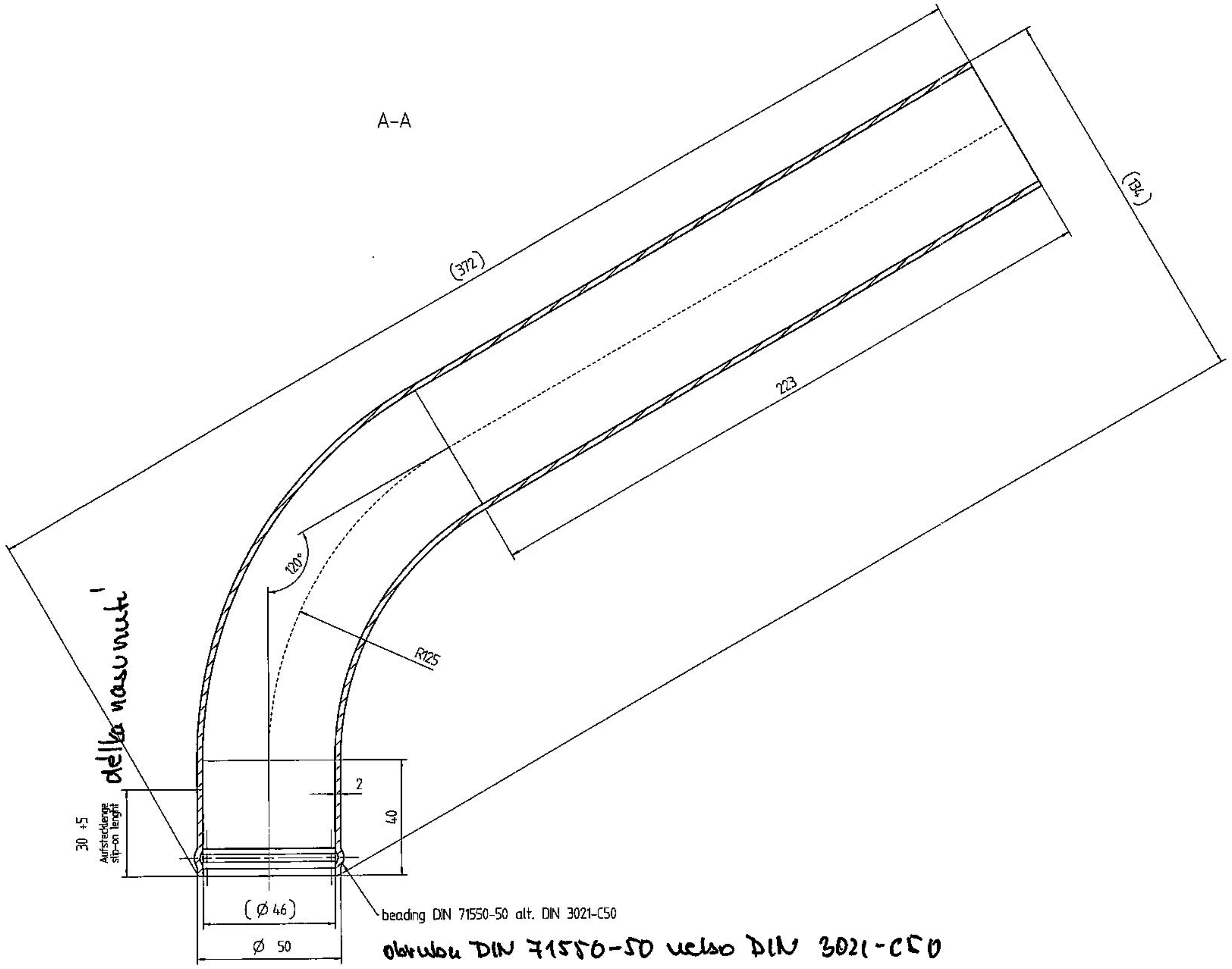

dellka nasunuti

obrubu DIN 71550-50 nebo DIN 3021-C50

15 -01- 2008
ARCHIV

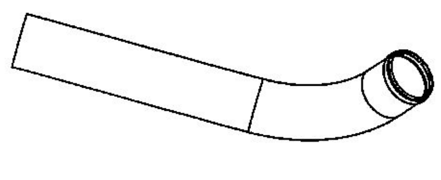

délka bez ohybu 394 mm

length without bending: 394 mm

Condition at time of delivery	
de-scaled (degree of purity SA 2 1/2 acc. ISO 8501-1)	X
without burrs acc. WN 11310	X
Permissible top-end rounding during flame cutting (also positive bead acc. WN 10572)	
oil-free / free of grease	X
oiled	
oiling permissible	
alternatively identify condition at time of delivery with an X	

First angle projection

General tolerance (GT) in mm

Size range	≤ 30	> 30 ≤ 120	> 120 ≤ 400	> 400 ≤ 1000	> 1000
GT coarse					
L	1	2	2	3	4
∢	1	2	4	6	

Lengths (L) and angle ⊥ ⏥ = ± GT

Tolerance Symbols ISO 1101
- ○ roundness =1/2e-Tol.
- ⏤ ▱ straightness/flatness = GT
- ◎ ↗ concentricity/run out = GT
- ⌯ symmetry = GT
- // parallelism = GT
- ⊕ position = GT

Languages: de,en

Index	alteration	Change no	Fit	Toler.
02	RFQ --> PROD	TD4009		

Inspection dim. ⬭
Auxiliary dim. ( )

	Date	Name
Drawn	9.11.2007	A.Altenbeck
Checked	9.11.2007	J.Patzlaff
Auth'd	5.12.2007	J.Schreiber
M.check.	7.12.2007	S.Schneider

Material: E195 +A (St34-2 GBK) alt. E235 +A (St37-2 GBK)

Weight: in kg 0.93

Blank no:

Title: pipe elbow
oiltank

PROD.

Scale 1:1

Drawing number / / 0009545404

Sheet: 1 of: 1

Confidential document
Refer to protection notice ISO 16016

Repl. Orig. 0009545401

Released 0009545404d001 A1

0009545404_DRW_000_021h28o dehamsap65s DE440F 2007-12-21T10:02:36 0.479815 . KE5 W2H4b 104 .