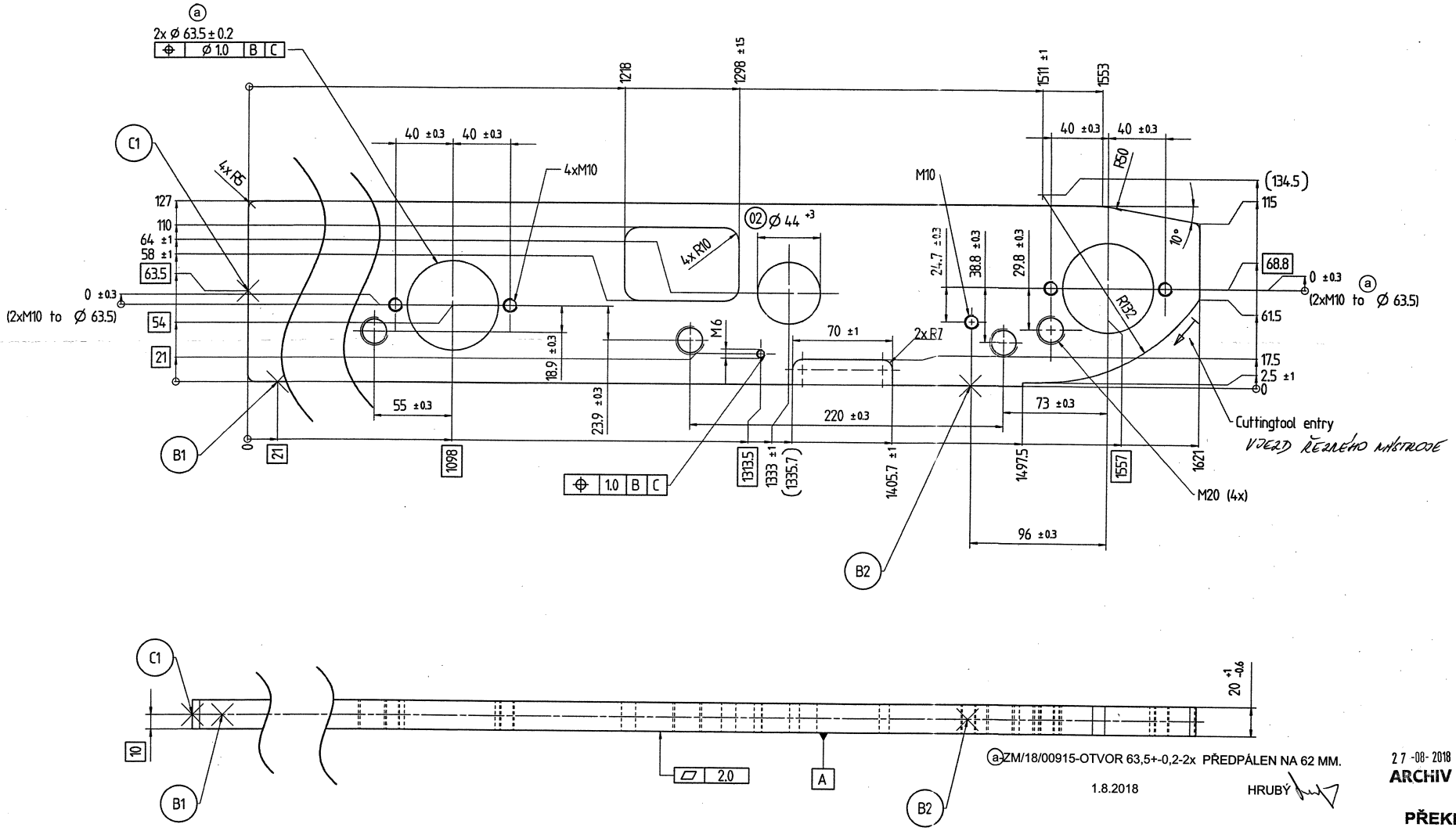

a-ZM/18/00915-OTVOR 63,5+-0,2-2x PŘEDPÁLEN NA 62 MM.

1.8.2018

HRUBÝ

27 -08- 2018
ARCHIV 2

PŘEKLAD
dne: 17 -04- 2015
PROVEDL/A

-0.4
-0.2

NEVKÓTOVANÝ DETAIL DLE 3D DAT

N2 15/00412 ZM/18/00915 K. Dušková

Non-dimensioned details according to 3D-Data

Autogenous flame cutting WN 10 572				
Thickness of the cut	≤ 20	> 20 ≤ 40	> 40 ≤ 60	> 60 ≤ 100
Rectangularity Inclination	1,0	1,4	1,8	2,2
Surface roughn. R_z	100	160	160	250
all possible cuttingtool entries marked by:				

Tolerances for section to DIN 6930 Part 2 accuracy grade g

outline length WN 10535		
outer	3469.2	mm
inner	1137.5	mm

Condition at time of delivery	
de-scaled (degree of purity SA 2 1/2 acc. ISO 8501-1)	X
without burrs acc. WN 11310	X
Permissible top-end rounding during flame cutting (also positive bead acc. WN 10572)	–
oil-free / free of grease	X
oiled	–
oiling permissible	–

Indicate the required condition at time of delivery with an X.

First angle projection

General tolerance (GT) in mm
Size range ≤ 30 | > 30 ≤ 120 | > 120 ≤ 400 | > 400 ≤ 1000 | > 1000

GT coarse

L	1	2	2	3	4
◁	1	2	4	6	

Lengths (L) and angle ⊥ ∠ = ± GT

Tolerance Symbols ISO 1101
- ○ roundness = 1/2ø-Tol.
- – ▱ straightness/flatness = GT
- ◎ ↗ concentricity/run out = GT
- ⌯ symmetry = GT
- / / parallelism = GT
- ⊕ position = GT

Languages: EN

Index	alteration	Change no	Fit	Toler.
02	hole 44+3 was 44+1	T69353		

Inspection dim.
Auxiliary dim. ( )

	Date	Name
Drawn	24.03.2015	A.Schäflein
Checked	24.03.2015	M.Pieritz
Auth'd	24.03.2015	B.Cajan
M.check.	08.04.2015	C.Ulbrich

Material: S355J2+N
Blank no:
Title: plate LH R25
Weight: in kg 29.6
Prod.
Scale 1:2
Sheet: 1 of: 1
Drawing number 11204012570
Repl. 11204012521
Orig.
Released
3012653/D2D/001/02 A2
11204012570V02ENd001